UAH25-56.8-M

The a|VariMount UAH25-56.8-M is an innovative optomechanical mount designed for seamless integration and precise alignment of optical components with a outer diameter of 56.8 mm - like the a|VariColl from asphericon. This mount eliminates the need for additional adapters, reducing set-up length and minimizing the risk of tilt and decentration. It is compatible with 60 mm cage systems from manufactures such as Thorlabs and OptoSigma, and can be easily mounted on various rail systems. The design ensures a broad surface clamping of optical components, reducing stress and deformation, and includes M4 and M6 threaded holes for compatibility with all post systems.

Technical Dimensions:

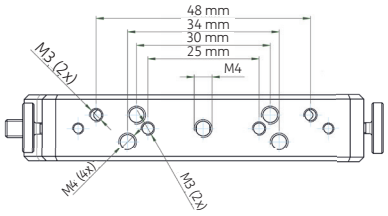

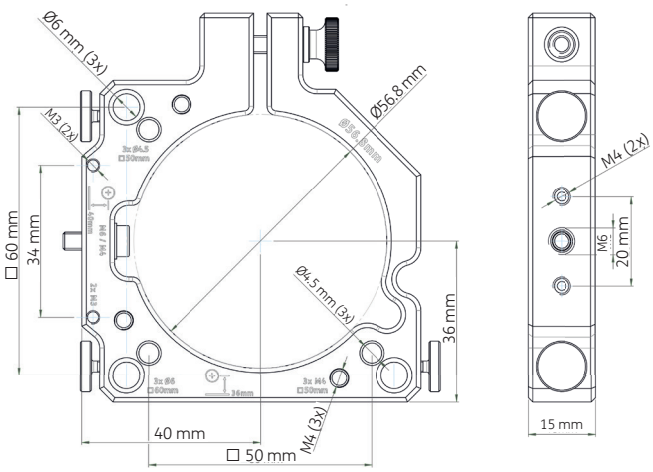

Accessories:

3x M2.5x5 with knurls
1x M4x12 - cylinder head screw
1x M4x18 - knurled head screw
1x M6x14 - cylinder head screw
1x washer - M4

How to use

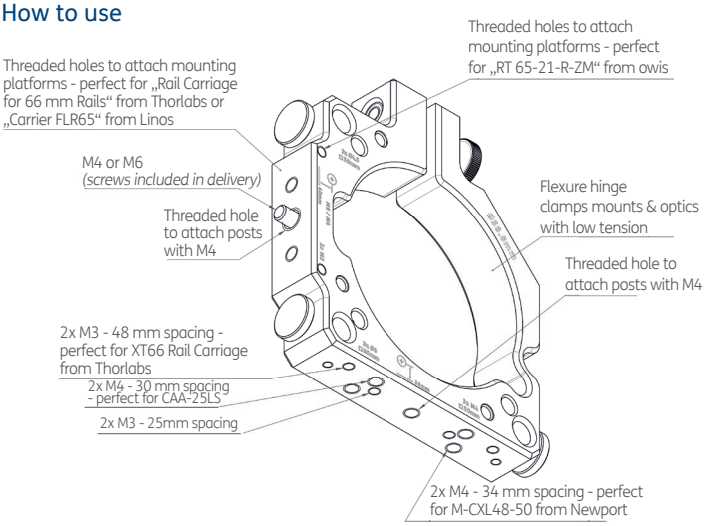

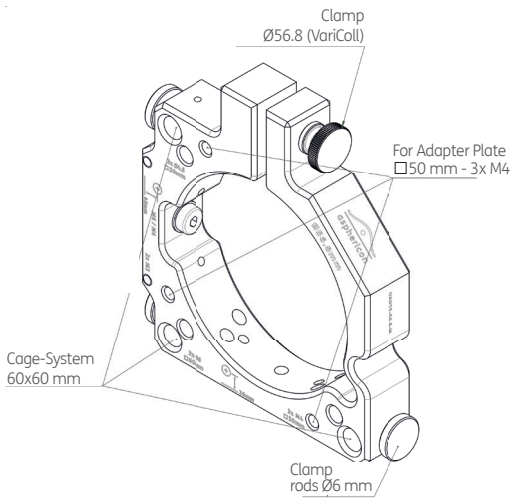

asphericon GmbH
Stockholmer Str. 9 | 07747 Jena
Germany
+49 (0) 3641 - 3100 560
+49 (0) 3641 - 3100 561

asphericon, Inc.
8586 Potter Park Drive
Sarasota, FL 34238 | USA
+1 - 941 - 564 0890

asphericon s.r.o.
Milířská 449 | Jeřmanice 463 12
Czech Republic
+420 488 100 300

sales@asphericon.com
www.asphericon.com